USER'S MANUAL

Newton+

AUTOMATIC POWER FACTOR CORRECTION RELAY

This document contains the latest technical information about Automatic Power Factor Correction Relay, Newton+ which is a micro-controller based KVAR controller. The product, Newton+ is sophisticated electronic equipment and, the user is advised to read this User's Manual carefully before attempting to install or operate the equipment.

Published on: (mention the date of publishing)
Document Version: 1.0

Warranty statement

Trinity warrants to the original retail purchaser of the Trinity product enclosed with this limited warranty statement that the product, if purchased new and used in the India conforms to the manufacturer's specifications and will be free from defects in workmanship and materials for a period of one year from the date of original purchase, unless expressly stated otherwise by Trinity, in a written format.

Should your Trinity product prove defective during the warranty period, please bring the product securely packaged in its original container or an equivalent, along with proof of the date of original purchase, to our Trinity Dealer or Factory. You are responsible for all costs (shipping, insurance, travel time) in getting the product to the service location. Trinity will, at its option, repair or replace on an exchange basis the defective unit, without charge for parts or labor. When warranty service involves the exchange of the product or of a part, the item replaced becomes Trinity property. The replacement unit may be new or refurbished to the Trinity standard of quality, and at Trinity's option, the replacement may be another model of like kind and quality. Trinity's liability for replacement of the covered product will not exceed the original retail selling price of the covered product. Exchange or replacement products or parts assume the remaining warranty period of the product covered by this limited warranty.

What This Warranty Does Not Cover:

This warranty does not apply to refurbished or reconditioned products. This warranty covers only normal use in India. This warranty does not cover damage to the Trinity product caused by parts or supplies not manufactured, distributed or certified by Trinity. This warranty is not transferable. This warranty does not cover third party parts, components or peripheral devices added to the Trinity product after its shipment from Trinity. Trinity is not responsible for warranty service should the Trinity label or logo or the rating label or serial number be removed or should the product fail to be properly maintained or fail to function properly as a result of misuse, abuse, improper installation, neglect, improper shipping, damage caused by disasters such as fire, flood, and lightning, improper electrical current, interaction with non-Trinity products, or service other than by an Trinity Authorized Service.

The warranty and remedy provided above are exclusive and in lieu of all other express or implied warranties including, but not limited to, the implied warranties of merchantability or fitness for a particular purpose. In the event, the remedies above fail, Trinity's entire liability shall be limited to a refund of the price paid for the Trinity product covered by this limited warranty. Except as provided in this written warranty, neither Trinity Energy Systems Pvt. Ltd. nor its affiliates shall be liable for any loss, inconvenience, or damage, including direct, special, incidental, or consequential damages, resulting from the use or inability to use the Trinity product, whether resulting from breach of warranty or any other legal theory.

Contents

Introduction **4**
System Considerations 4
The Main Features Available in This System 5
Technical Specifications 6

Installation and Commissioning **7**
Connection Scheme 9

Operational Details **10**
Programming Mode 11
1. Selecting the Mode of Control Action 11
2. Setting the Main CT Ratio 12
3. Setting the Capacitor CT Ratio 12
4. Setting Scroll Display in Run Mode 13
5. Setting the Desired PF 13
6. Setting the Time Delay in between stages 14
7. Setting On Delay with Lagging PF 14
8. Setting OFF Delay with Leading PF 15
9. Selecting a Capacitor Bank Stages 15
10. Selecting for a Sense in percentage of Minimum Bank 16
11. Performing Autosense of Capacitor Bank 16
Run Mode 18
1. Screen Displays 18

Control Outputs **19**
(A) Trouble Shooting 19
(B) Trouble Shooting Guide 22

Introduction

The relay is meant for flush mounting in a panel for connection to the electrical system. The relay is the `intelligence' which controls the automatic system for correction of the power factor. It senses the power factor by taking the ratio of the true-rms KW of the system, and the KVA, for any one phase of the three phase electrical system, when it operates in PF sensing mode. This means that phase and neutral wire are connected as voltage inputs and the current of the same phase as current input, for PF sensing mode of operation. For VAR sensing mode of operation, the relay calculates the KVAR requirement of the system (VxIxsin ϕ). For correct operation of the relay, however, there are some minimum system requirements to be met. Unless the various points in the system which are mentioned below are correctly setup, proper operation of the relay cannot be expected.

System Considerations

1. If there is an imbalance loads in the three phases, the current transformer (CT) must be mounted on the phase which has maximum load. All the load currents and the capacitor current must pass through the bus on which the main CT is mounted. Ensure that this condition is achieved for proper operation of relay.

2. The actual load current at the time of operation should be more then 5% of the CT primary current rating. If this is not true, the relay will not operate.

3. The relay assumes a uniform loading of the three phase system. In case a capacitor banks are not operating and the relay indicates LEAD power factor, then the Main CT, S1 and S2 must be interchanged so as to correct the polarity error.

4. The relay senses the power factor and switches ON or OFF the capacitor banks (through contactors in a panel), to bring power factor closest to the set value. For this the voltage must be within plus/minus 20 % of the rated voltage of the relay. The voltage is to be sensed between any phase and neutral.

5. If need is failed for an external auto control, there is no harm in having one provided, it must be implemented properly. An improperly implemented scheme might cause the multi-operation of the panel. Make sure this is not the case before putting the blame on the relay.

6. Capacitor CT rating must be calculated for autosense as,

$$\text{CT Primary} \geq \text{Total KVAR X } 1.6$$

7. Check all these points carefully in the system. If found ok, installation and commissioning of the relay is easy.

The Main Features Available in This System

- Full functional 16 x 2 backlight LCD
- Selectable Main CT Ratio and Capacitor CT Ratio
- Automatic Power Factor Control through PF, Binary and VAR Action
- Programmable target PF setting
- Programmable Time Delay for step switching
- System KVAR value
- Selectable Capacitor Bank Stages and Autosense of its bank sizes
- Selectable for Run Mode display Scroll and Unscroll
- Measurement of System Active Power (KW).

NEWTON+ 16X2 LC DISPLAY

Technical Specifications

Parameter			
Type		**Name**	**Statistics**
INPUT		Supply	One Phase and Neutral of a 3P4W system
		Voltage	Direct Voltage Input : Up to 300V L-N Burden : 0.5VA
		Current	Secondary Current Input : 5A or 1A (To be specified at the time of Ordering) CT Ratio : Site Selectable Range of Reading : 5 – 5000A Burden : < 1.0VA Overload : 5A CT = 6A RMS Continuous 1A CT = 1.2A RMS Continuous
		Power Supply	Self Powered from mains. Wide operating Voltage SMPS: 80 VAC - 240 VAC, 50-60 Hz.
OUTPUT		Relay	Switching Voltage : Max. 230 VAC Switching Power : Max. 1000W Expected Mechanical Life: >10 x 10^6 switching operations. Expected Electrical Life : >4 x 10^6 switching operations. @(Load = 200VA, Cosφ = 0.5)
MEASUREMENT	**True RMS Basic Parameters**	Voltage (Volts L-N)	Accuracy : 0.5% of Reading
		Current (Amps)	Accuracy : 0.25% of Reading
		Capacitor Current	CT Ratio : Site Selectable Accuracy :1.0% of Reading
		Power Factor	Accuracy : 1.0% of Reading (I*PF*I≥0.5) Range of Reading : 0.05 to 1.00 Lag/Lead
MISCELLANEOUS	**Dimensions**	Bezel	96X96 mm
		Depth of installation	55 mm
	Operating temp		10°C to 50°C
	Weight		0.3 kg (aprox.)
	Min. Operating Current		1% of CT Primary in VAR mode, 6% in PF mode.

Installation and Commissioning

The NEWTON+ is a single phase autosense. Make sure the Main CT must be mounted on a phase which has a maximum load if there is an imbalance load in an electrical installation. The phase itself must also be connected to the unit to supply power from it. In case of VAR control action, ensure that the Capacitor CT must be mounted on its same phase in order to give true PF value and autosense for each capacitor banks.

To install and commission the unit, proceed the following instructions:

1. Push the unit into the Panel and mount it by using the clamps provided.

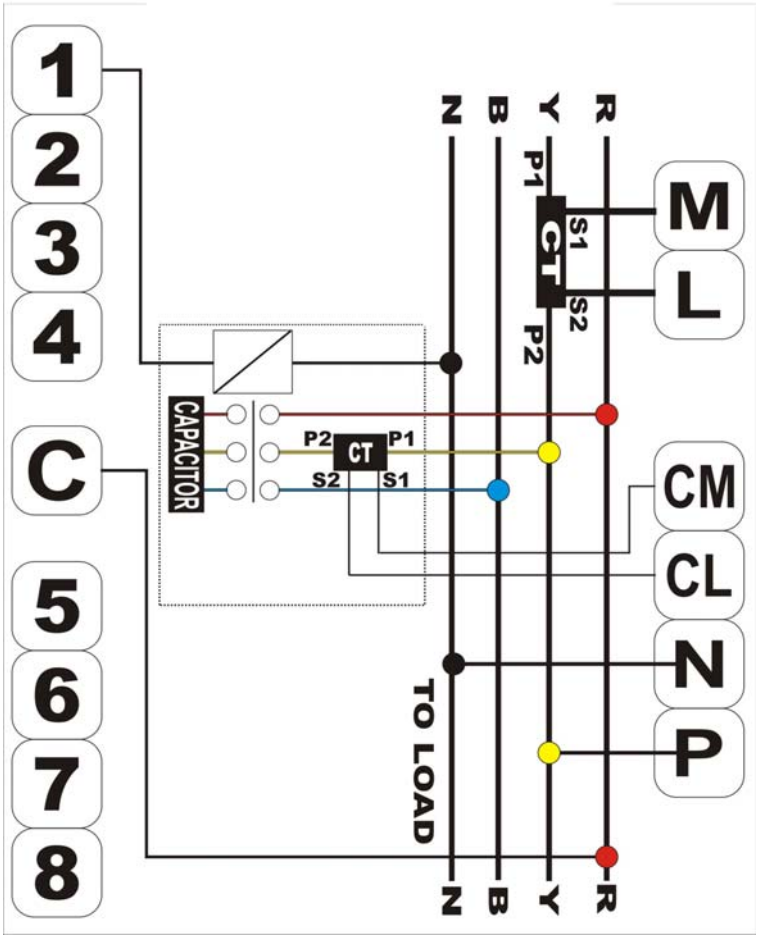

2. In case Y-phase has maximum load in your system, connect the two wires from the Y-phase Main CT to terminals marked M and L such that S1 from CT goes to M and S2 from CT goes to L on the unit. Make sure that the three phases coming to the unit come through control fuses 1.0 Amp rating. This will protect the electronics inside from damage due to severe over voltages or phase faults in the system.

3. Connect the two wires from the Y-phase capacitor CT to terminals marked CM & CL such that S1 from CT goes to CM on the unit. (*The capacitor CT is applicable for operation in VAR mode only. In FIFO mode, the capacitor CT is not applicable*).

4. Connect the Y-phase and neutral wire to the terminals marked P and N such as shown above.

   [Ensure that the phase used for voltage connection is same as the phase on which the Main CT is mounted and the current direction must be also proper polarity. This is vital for the correct operation of NEWTON+].

5. Switch on the three phases supply, the unit will then prompt a power receiving information such as — — — TRINITY— — — —for about 2 to 3 seconds.

6. First of all, user should program the following parameters of the unit: such as Control Mode of operation, Main CT-Ratio, Scroll Seconds, desire PF, Time Delay, On Delay, Off Delay, Bank Stages, Minimum Bank and Autosense. (Refer *Operational Details* in the next section). *The proper operation of the relay will commence only after these parameters are defined.*

   In case of AUTOSENSE, the unit switches on one bank at a time and also, displays the bank size of every stage. After AUTOSENSING is completed, the unit will return into Run Mode.

7. Now, the unit is ready for operation.

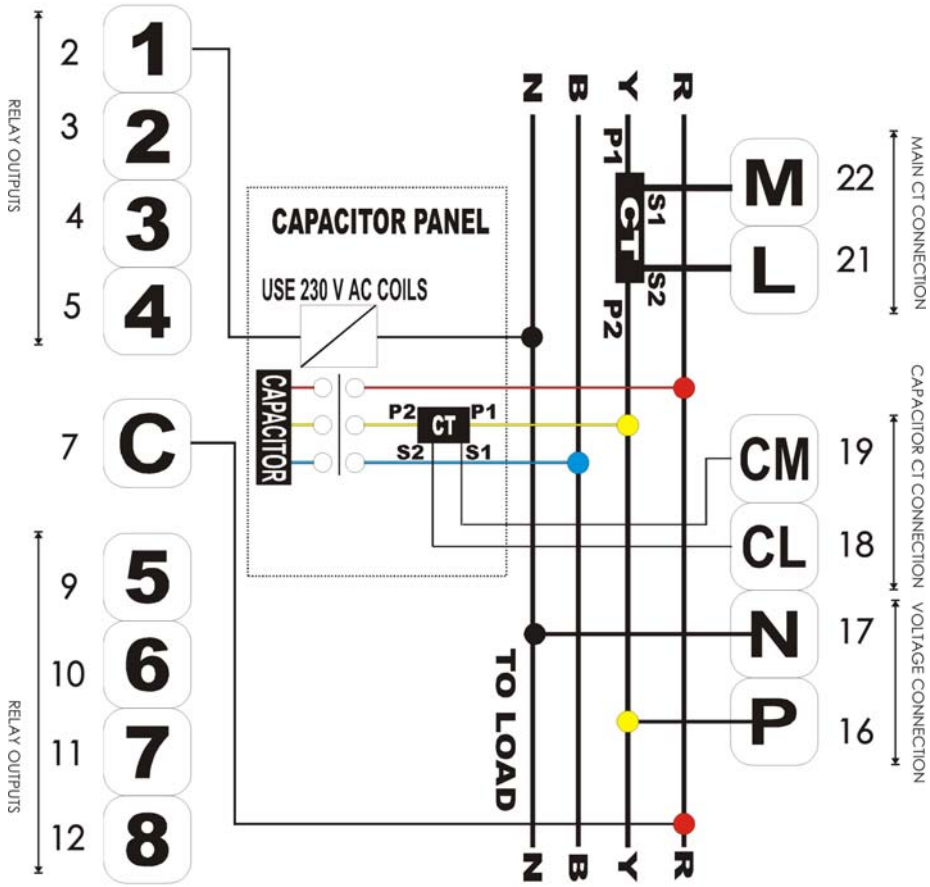

Connection Scheme

Operational Details

The KVAR Based Controller NEWTON+ is a versatile meter, with all the features needed to implement a robust electrical load management system. It can be configured to suit most PF correction and communication needs and, is also achieved by making as many parameters field programmable as much as possible.

There are basically two modes of operation in NEWTON+:

1. Programming Mode
2. Run Mode

After supplying power (80 VAC - 240 VAC) to the three phases, the unit displays immediately power receiving information, — — — TRINITY— — — — on LCD screen and by default, the display comes into Run Mode such as shown below.

```
VOLT=235.3
```

Now, the unit can be operated by using the following keypad provided for both the Programming Mode and Run Mode such as shown below.

Programming Mode

In order to operate for all the field programmable parameters, it is easy for user interface by pressing the keys such as PROG ENTR, ▲ and ▼. Once the display is in Programming Mode, press ▲ key to enter into the following programmable parameters:

1. The Mode of Control Actions- PF_FIFO/ VAR/BINARY/NONE
2. CT Ratio for load currents
3. CT Ratio for current capacitor
4. Scroll displays in the Run Mode
5. Desired PF setting
6. Time Delay - delay between two successive switching operations of relay
7. On Delay with Lagging PF
8. Off Delay with leading PF
9. Capacitor Bank stages
10. Selectable of a minimum bank in percentage form
11. Autosense of capacitor bank.

1. Selecting the Mode of Control Action

For PF correction, there are three types of control action such as **PF_FIFO**, ***VAR, BINARY*** and ***NONE*** which are also selectable at site. In case, the control action is selected to VAR, Capacitor CT and AUTOSENSING parameters are applicable in Programming Mode. However, both the two parameters will not be applicable in case of PF and Binary selected.

To select the control action, proceed the following instructions:

1. In Run Mode, press PROG ENTR key for about 4 to 5 seconds and then the unit will enter into Programming Mode such as shown below.

   CONTROL=VAR

2. Press PROG ENTR key. Immediately, P starts blinking which shows that the parameter can now be changed. Set the desired Control mode by pressing ▲ and ▼ keys and then, press PROG ENTR key to confirm the parameter setting.

3. The unit will automatically reset and return into Run Mode. In case, your setting is not completed, proceed the above instruction to specify for other parameters.

2. Setting the Main CT Ratio

In order to give actual current values in this unit, the main CT Ratio should be set accordingly. The CT Ratio can be set from 5A to 5000A.

To set the Main CT Ratio, proceed the following instructions:

1. In Run Mode, press PROG ENTR key for about 4 to 5 seconds and then the unit will enter into Programming Mode. Press ▲ key to receive the Main CT Ratio such as shown below.

   CTR_MAIN=500

2. Press PROG ENTR key. Immediately, P starts blinking which shows that the parameter can now be changed. Set the desired Main CT Ratio by pressing ▲ and ▼ keys and then, press PROG ENTR key to confirm the parameter setting.

3. In case, your setting is completed, press PROG ENTR key for about 4 to 5 seconds to return into Run Mode. Or press ▲ and ▼ keys to specify for other parameters such as above instructions.

3. Setting the Capacitor CT Ratio

For the application of VAR mode of Control Action, the Capacitor CT Ratio in between the primary and secondary current should be set from 5 A to 2000 A.

To set Capacitor CT Ratio, proceed the following instructions:

1. In Run Mode, press PROG ENTR key for about 4 to 5 seconds and then the unit will enter into Programming Mode. Press ▲ key to receive the Capacitor CT Ratio such as shown below.

   CTR_CAP=50

2. Press PROG ENTR key. Immediately, P starts blinking which shows that the parameter can now be changed. Set the desired Capacitor CT Ratio by pressing ▲ and ▼ keys and then, press PROG ENTR key to confirm the parameter setting.

3. In case, your setting is completed, press PROG ENTR key for about 4 to 5 seconds to return into Run Mode. Or press ▲ and ▼ keys to specify for other parameters such as above instructions.

4. Setting Scroll Display in Run Mode

The Run Mode page is in Freeze Mode by default displaying with the first Run Mode page, system Voltage which is also freely programmable from 5 to 12 seconds so as to scroll to each parameter on a cyclic basis. However, the display will be frozen if the SCROLL is set to zero.

To set the Scroll, proceed the following instructions:

1. In Run Mode, press PROG ENTR key for about 4 to 5 seconds and then the unit will enter into Programming Mode. Press ▲ key to receive the Scroll Second such as shown below.

   SCROLL_SEC=0

2. Press PROG ENTR key. Immediately, P starts blinking which shows that the parameter can now be changed. Set the desired Scroll Second by pressing ▲ and ▼ keys and then, press PROG ENTR key to confirm the parameter setting.

3. In case, your setting is completed, press PROG ENTR key for about 4 to 5 seconds to return into Run Mode. Or press ▲ and ▼ keys to specify for other parameters such as above instructions.

5. Setting the Desired PF

The desired PF can be set to either Lead or Lag side according to your requirement. In case of PF_FIFO as well as Binary control action, the PF should be set in between 0.800 LAG to 1.000 LAG. In case of VAR Control Action the desired PF should be set in between 0.800 LAG to 1 or 1.800 LEAD to 1. Here, a desired PF to be set for 0.999 LEAD should be set as 1.999.

To set the desired PF, proceed the following instructions:

1. In Run Mode, press PROG ENTR key for about 4 to 5 seconds and then the unit will enter into Programming Mode. Press ▲ key to receive the Set PF such as shown below.

   SET_PF=1.0

2. Press PROG ENTR key. Immediately, P starts blinking which shows that the parameter can now be changed. Set the desired PF by pressing ▲ and ▼ keys and then, press PROG ENTR key to confirm the parameter setting.

3. The unit will automatically reset and return into Run Mode. In case, your setting is not completed, proceed the above instruction to specify for other parameters

6. Setting the Time Delay in between stages

This is one type of digital dead band. During the Time Delay, the unit will not take any control action. Hence the Time Delay is settable from 40 to 180 seconds.

1. In Run Mode, press PROG ENTR key for about 4 to 5 seconds and then the unit will enter into Programming Mode. Press ▲ key to receive the Time Delay such as shown below.

```
TIME DELAY=40
```

2. Press PROG ENTR key. Immediately, P starts blinking which shows that the parameter can now be changed. Set the desired Time Delay by pressing ▲ and ▼ keys and then, press PROG ENTR key to confirm the parameter setting.

3. In case, your setting is completed, press PROG ENTR key for about 4 to 5 seconds to return into Run Mode. Or press ▲ and ▼ keys to specify for other parameters such as above instructions.

7. Setting On Delay with Lagging PF

In case of PF Control Action, On Delay is freely programmable from 10 to 20. If the system PF falls below the target PF with lagging PF, the unit checks whether the switching capacitor could be persistent or no. If target PF is not achieved, the relay switches on the capacitor bank accordingly.

1. In Run Mode, press PROG ENTR key for about 4 to 5 seconds and then the unit will enter into Programming Mode. Press ▲ key to receive the On Delay such as shown below.

```
ON DELAY=10
```

2. Press PROG ENTR key. Immediately, P starts blinking which shows that the parameter can now be changed. Set the desired On Delay by pressing ▲ and ▼ keys and then, press PROG ENTR key to confirm the parameter setting.

3. In case, your setting is completed, press PROG ENTR key for about 4 to 5 seconds to return into Run Mode. Or press ▲ and ▼ keys to specify for other parameters such as above instructions.

8. Setting OFF Delay with Leading PF

In case of PF control action, Off Delay is freely programmable from 10 to 20. If the system PF falls below the target PF with leading PF, the unit checks whether the switching capacitor could be persistent or no. If target PF is not achieved, the relay switches off the first capacitor on in order to correct PF with a FIFO mode of control action.

To set the Off Delay, proceed the following instructions:

1. In Run Mode, press PROG ENTR key for about 4 to 5 seconds and then the unit will enter into Programming Mode. Press ▲ key to receive the Off Delay such as shown below.

```
OFF DELAY=10
```

2. Press PROG ENTR key. Immediately, P starts blinking which shows that the parameter can now be changed. Set the desired Off Delay by pressing ▲ and ▼ keys and then, press PROG ENTR key to confirm the parameter setting.

3. In case, your setting is completed, press PROG ENTR key for about 4 to 5 seconds to return into Run Mode. Or press ▲ and ▼ keys to specify for other parameters such as above instructions.

9. Selecting a Capacitor Bank Stages

NEWTON+ supports upto 8 capacitor bank Stages. For user's system requirement, the number of Stages can be selected from 2 to 8 so as to operate the KVAR control.

To select the Stages, proceed the following instructions:

1. In Run Mode, press PROG ENTR key for about 4 to 5 seconds and then the unit will enter into Programming Mode. Press ▲ key to receive the Bank Stage such as shown below.

```
STAGE=8
```

2. Press PROG ENTR key. Immediately, P starts blinking which shows that the parameter can now be changed. Set the desired Bank Stage by pressing ▲ and ▼ keys and then, press PROG ENTR key to confirm the parameter setting.

3. In case, your setting is completed, press PROG ENTR key for about 4 to 5 seconds to return into Run Mode. Or press ▲ and ▼ keys to specify for other parameters such as above instructions.

10. Selecting for a Sense in percentage of Minimum Bank

In case, the need KVAR exceeds 75% of the minimum capacitor bank, the relay switches the minimum bank on. Hence, the parameter can also be set to 100% according to your desire.

1. In Run Mode, press PROG ENTR key for about 4 to 5 seconds and then the unit will enter into Programming Mode. Press ▲ key to receive the Minimum Bank such as shown below.

```
MIN.BANK=75%
```

2. Press PROG ENTR key. Immediately, P starts blinking which shows that the parameter can now be changed. Set the desired Minimum Bank by pressing ▲ and ▼ keys and then, press PROG ENTR key to confirm the parameter setting.

3. In case, your setting is completed, press PROG ENTR key for about 4 to 5 seconds to return into Run Mode. Or press ▲ and ▼ keys to specify for other parameters such as above instructions.

11. Performing Autosense of Capacitor Bank

In case, the Autosense is set to YES, the relay switches on all capacitor banks one by one. The bank sizes will also display as they get sensed one by one and the user must therefore be patient and wait for about 4 to 5 minutes while the autosense is in progress. This process is vital for the smooth operation of the relay. Once all capacitor banks could be sensed, the relay will restart for control action after a while.

To set the Autosense of capacitor, proceed the following instructions:

1. In Run Mode, press PROG ENTR key for about 4 to 5 seconds and then the unit will enter into Programming Mode. Press ▲ key to receive the Auto Sense such as shown below.

AUTO SENSE? YES

2. Press PROG ENTR key. Immediately, P starts blinking which shows that the parameter can now be changed. Set the desired Auto Sense by pressing ▲ and ▼ keys and then, press PROG ENTR key to confirm the parameter setting.

3. In case, your setting is completed, press PROG ENTR key for about 4 to 5 seconds to return into Run Mode. Or press ▲ and ▼ keys to specify for other parameters such as above instructions.

Run Mode

In the run mode, the various parameters calculated by the NEWTON+ are displayed on different pages on a 16 X 2 backlit LC Display. There are five displays with the different parameters showing its system values. Those displays can be entered and analyzed one by one in this mode. The displays can also be frozen and unfrozen according to your convenience by programming the Scroll at site.

1. Screen Displays

Press ▲ or ▼ keys on Run Mode so as to receive the following displays:

Displays	Descriptions
VOLTS=242.3	The first display shows system voltage.
AMPS=373.9	The second display shows system current. In case, the unit is not loading, the display will show LC at right side of the parameter.
PF= 1.000 LG	The third display shows system PF.
KVAR=32.42 LG	The fourth display shows the system KVAR.
KW=50.4	The fifth display shows the system Active Power (KW).

Control Outputs

The relays are protected by snubbers against fast voltage transients which occur when inductive loads are switched off and therefore, the following points should be taken care when using these relay contacts:

- Use 230V AC coils only in the contactors. DO NOT use 440V AC coils.
- DO NOT switch small loads like electronic Hooters, small relays with 240V AC coils etc., directly from the relay contact of NEWTON+. If done so, the small leakage current from the snubbers will not allow these loads to be switched off fully. The electronic hooters thus will give a low hum continuously, and the small relays will switch on but not switch off.
- Use these relay contacts to switch an Auxiliary contactor and put the load on the contactor contacts.

For correct operation, various points in the system need attention and unless these are correctly set up, proper operation cannot be expected.

These points are noted in section (A) and (B) such as subsequent sections deal with operational checks, setting up and trouble shooting.

(A) Trouble Shooting

The **NEWTON+** is robust electronic equipment and must be handled with all the care merited by it. It is quite rugged and will withstand a few hard knocks, but this cannot make up for the deficiency in system design.

Repairs at site are not recommended because at most this can only be a patch work, and sustained reliability is difficult to achieve with a site repaired Relay. This section on Troubleshooting therefore deals with fault finding in the system and to establish whether the Relay is defective or whether it is a system problem. If the fault is seen to lie entirely with the Relay, it will have to be sent to factory for repairs.

System faults can be classified into three categories:

- Those related to the basic configuration of the system.
- Those related to the errors and mistakes in the implementation of the system design.
- Those related to the faults in the actual equipment.

a. Faults related to the actual system design:

The most common faults are:

External Manual Control not implemented properly

Here many designers provide a ‘Starter-relay’ configuration for the manual control, and just bring the connection from the relay contact to the contactor.

There are two problems with this:

i. Timing function is not provided from Manual control.
ii. The scheme does not work in Auto mode. The remedy is to examine the drawings and make changes at site. The temporary remedy is to change the relay mode to Manual, and use the panel manually. The better alternative is to change the control wiring to incorporate suitable isolating contacts, timers etc. to make a proper system.

CT of the Capacitor Panel itself connected to the Relay

In this case obviously the Relay does not read the power factor of the system. There is no current through the Relay when capacitors are off. If you force one of the capacitors on, it may cause an indication of full Lead (if the current taken by the capacitor is sufficiently high). If the Relay is in Auto mode, it will switch off the capacitor immediately, and nothing further will happen.

The only remedy is to disconnect the CT (short the secondary!) and bring a six core cable from the CT of the Main Incomer. Also check that the CT rating is near the actual full load current. Change the CT if it is too large.

Faults related to the external cabling

Only two cables originate in the panel: ***the Power Incomer to the panel*** and ***the CT connection*****s.**

The power flow from the source (such as the main transformer) to the capacitor panel as well as to the entire load must be through the bus on which the CT is mounted. It is best to provide separate CTs for the Relay to avoid problems.

b. Faults Related to the actual site conditions:

These faults occur when the actual site conditions are different from those assumed by the designer of the system. These faults relate to the location of the load feeders on the busbar, buscouplers, and connections from transformers etc. ***The locations of the CT are the most important factor as far as the Relay is concerned.***

Another problem frequently encountered is that of insufficient load on the power system. This might occur because the Plant has not been commissioned fully, or because the system allows for future expansion. In either case the actual current through the CT is very low compared to the rating of the CT.

In such conditions, the relay, (specially, if there are no small banks in the capacitor panel) will not take any control action at all. However, the transformer losses will cause the monthly average PF to show up as very poor. The remedy is to connect a small bank directly (independent of the automatic control scheme) for compensating transformer losses.

c. Faults related to the actual equipments:

These relate to the defects in the connected equipments. Again an exhaustive list is beyond the scope of this document. A few are listed below:

Blown fuses, shorted CT, shorted voltage connections, switches that do not make contact, open connections etc. Check everything - before, during and after commissioning and you will be rewarded with a finely tuned system which will give you years of trouble-free service.

(B) Trouble Shooting Guide

*(Read carefully section **(A). Troubleshooting** as before)*

1. ***Relay is dead.*** Check that the specified voltages are available at the voltage terminals of the Relay. Do not check with a neon tester. Use a multi-meter and check physically the voltages available at the R-Y, Y-B and B-R terminals. If the voltages are available and the Relay is dead, the Relay in all probability is defective. Please send it back for repairs.

2. ***Relay does not indicate expected power factor.*** Your wiring is wrong. Change around the wires leading to the R,Y,B voltage terminals of the Relay. There are six combinations, and only one of them is correct. Try all six. Also check that your expected power factor estimate is reasonably correct.

3. ***Relay switches the capacitors on, but the power factor does not improve***

   The source of this fault could be:

   a. The CT is located only on the Load bus, and capacitor current is not passing through the CT. Change the location of the CT to the true main Incomer.

   b. The capacitors are all defective. This seemingly unlikely fault has occurred at many sites. Measure the current in each lead of each capacitor as it switches on, to check. This would also reveal if all the fuses of all the capacitors have blown.

4. ***Relay switches on all the capacitors, the power factor improves, but does not reach the set value.*** At the extreme is the possibility that the total installed KVAR is too low. In this case, the Relay switches on all the capacitors but the power factor does not improve to the set value. Check if the capacitors are healthy. Remedy is to add capacitors and add stages. This may need total re-configuration of the panel wiring.

5. ***Relay switches on the contactors but does not switch them off, though indication on the Relay is correct.*** All contactors switch off simultaneously when the last switch off occurs. Your external Manual Control is not configured correctly. The contactors are latching up through their holding contacts. Extensive rewiring is required to remedy this fault. This is also possible if 440 VAC coils have been used.

6. ***Relay is on but PF meter indicates 1.0 always.*** The current through the Relay is inadequate.

P.O No. : ……

Customer : ……

Sr. No. : ……

Routine and function tests conducted to relevant standards and our Specifications/Literature/O & M Manual.

Traceability: tested against latest "MTE" Standard Model PRS400.3 having basic accuracy of 0.02% traceable upto International Standards derived using appropriate ratio techniques.

Result of Test : ……

Remarks : ……

Test engineer : ……

Date : ……